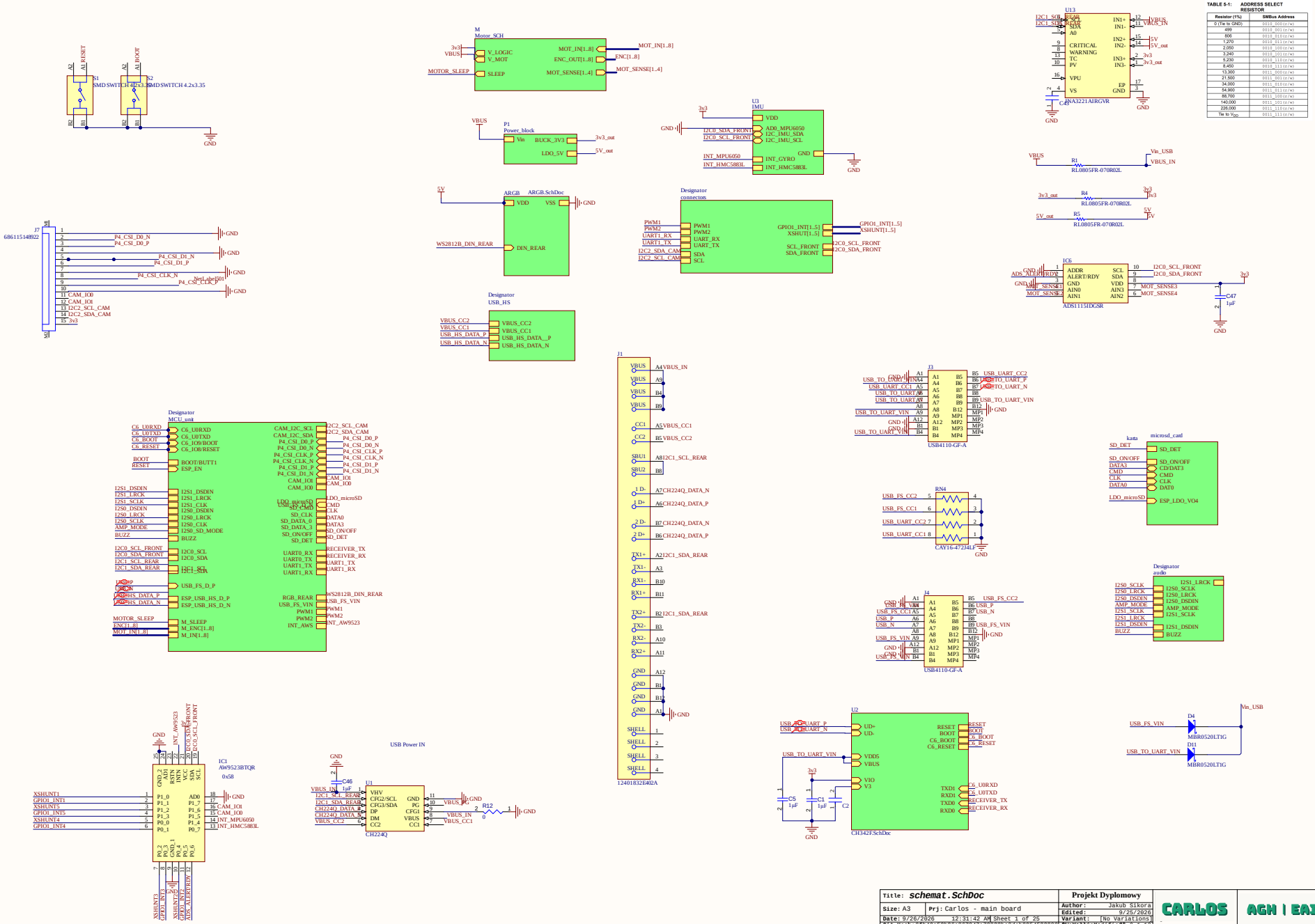

Title: schemat.SchDoc		Projekt Dyplomowy	
Size: A3	Prj: Carlos - main board	Author: Jakub Sikora	CARLOS
		Edited: 9/25/2026	AGH | EAIiIB
Date: 9/26/2026	12:31:42 AM Sheet 1 of 25	Variant: [No Variations]	
Git Hash: 9fb49a53b36a867847a73022ba8deb99545339888		Schematic Modified: 25.9.1.10	
File: C:\Users\Public\Documents\Altium\CARLOS - basic - Copy\schemat.SchDoc			

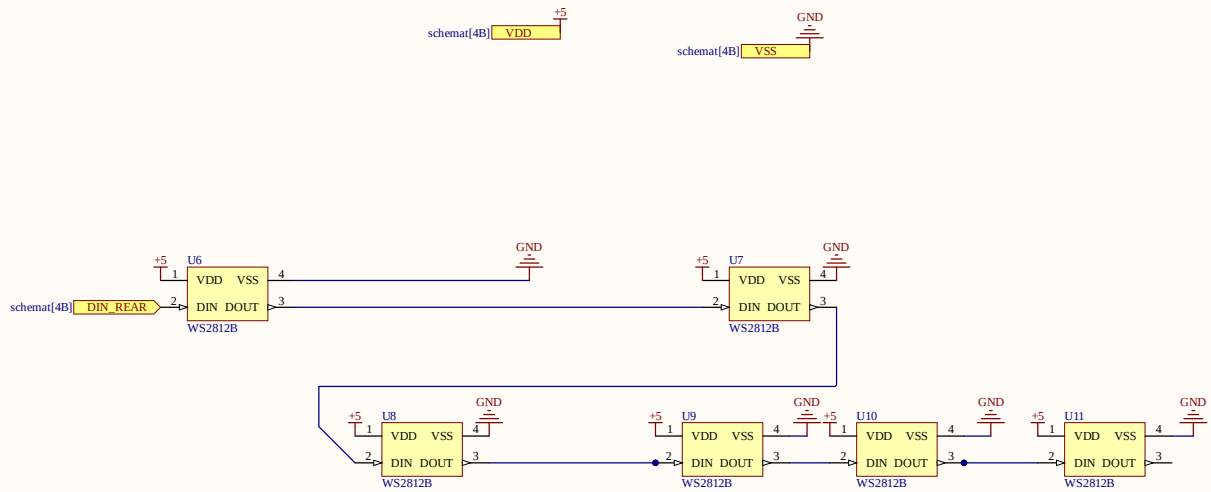

Title: *ARGB.SchDoc*		**Projekt Dyplomowy**	
Size: A3	**Prj:** Carlos - main board	**Author:** *	CARLOS
Date: 9/26/2026 12:31:44 AM	Sheet 2 of 25	**Edited:** 9/25/2026	AGH | EAIiIB
Git Hash: 9fb49a53b36a867847a73022ba8deb9954533988		**Variant:** [No Variations]	
File: C:\Users\Public\Documents\Altium\CARLOS - basic - Copy\ARGB.SchDoc		**SW Version:** 26.9.1.10	

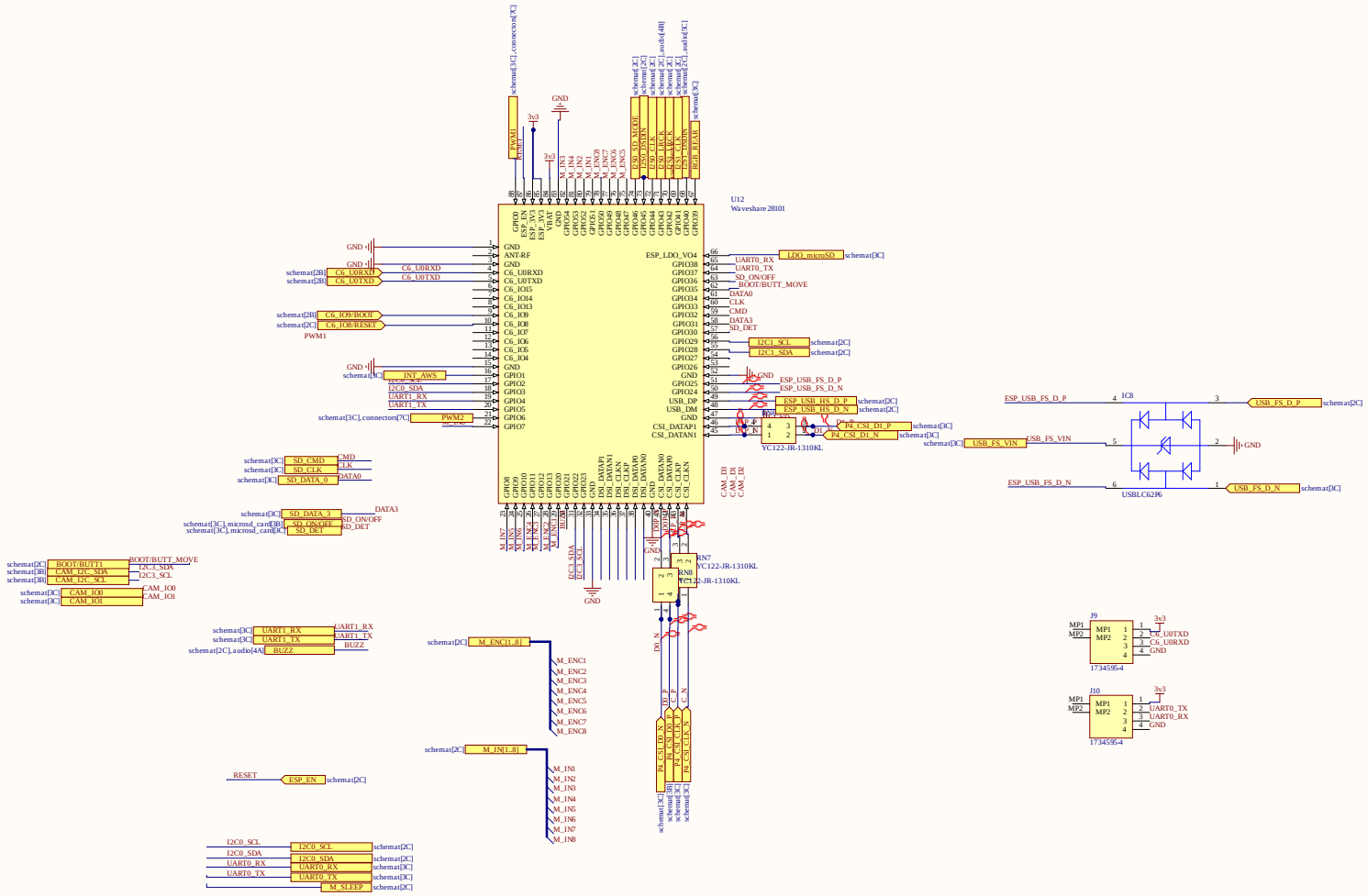

Title: *MCU_unit.SchDoc*		Projekt Dyplomowy	
Size: A3	Prj: Carlos - main board	Author: Jakub Sikora	CARLOS
		Edited: 9/25/2026	AGH | EAIiIB
Date: 9/26/2026 12:31:47 AM	Sheet 3 of 25	Variant: [No Variations]	
Git Hash: 9fb49a53b36a867847a73022ba8de0e99545339 88		SW Version: 26.9.1.10	
File: C:\Users\Public\Documents\Altium\CARLOS - basic - Copy\MCU_unit.SchDoc			

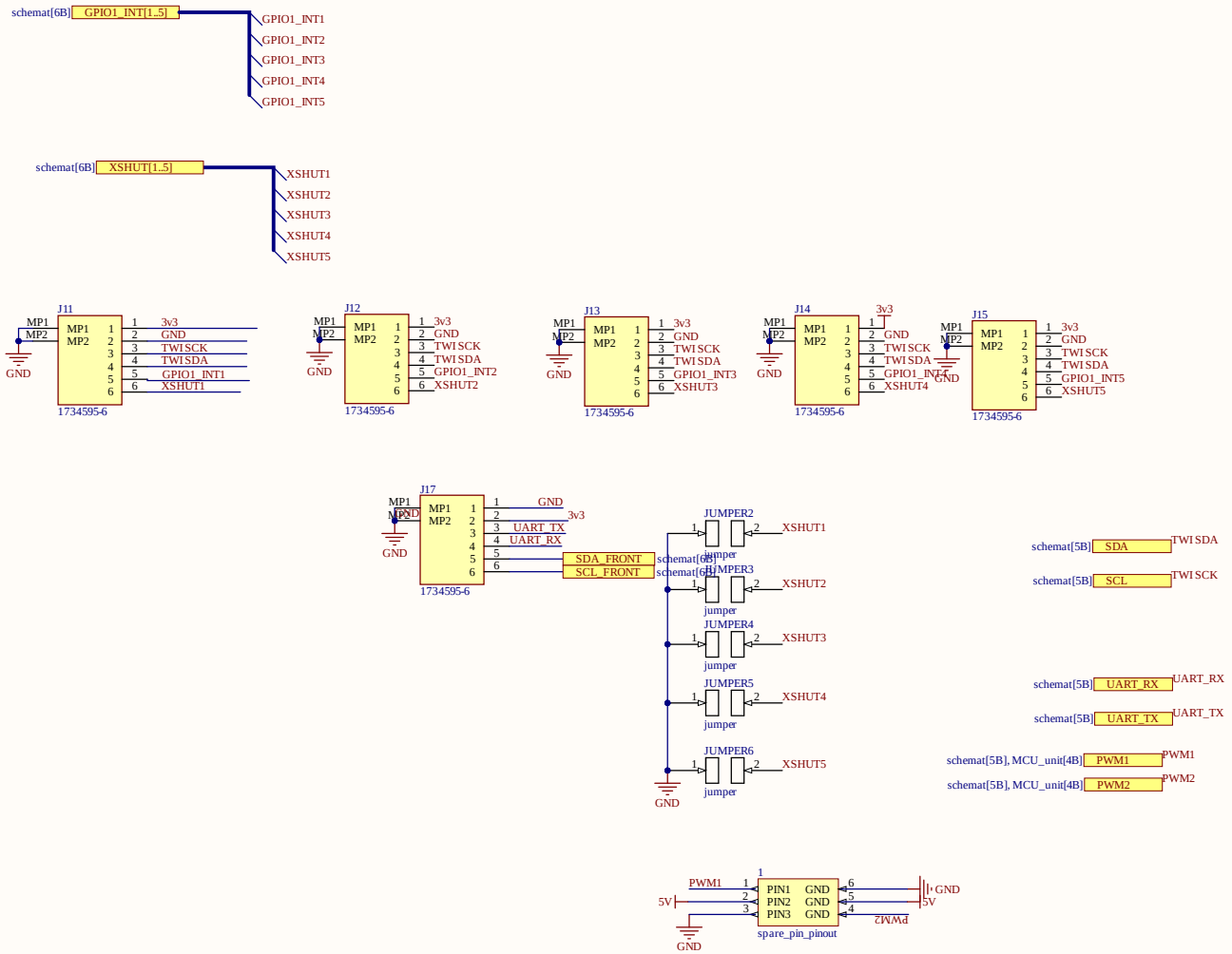

Title: connectors.SchDoc		Projekt Dyplomowy	CARLOS / AGH | EAIiIB
Size: A3	Prj: Carlos - main board	Author: *	
Date: 9/26/2026 12:31:49 AM	Sheet 4 of 25	Edited: 9/25/2026	
Git Hash: 9fb49a53b36a867847a73022ba8deb9954533988		Variant: [No Variations]	
File: C:\Users\Public\Documents\Altium\CARLOS - basic - Copy\connectors.SchDoc		SW Version: 26.9.1.10	

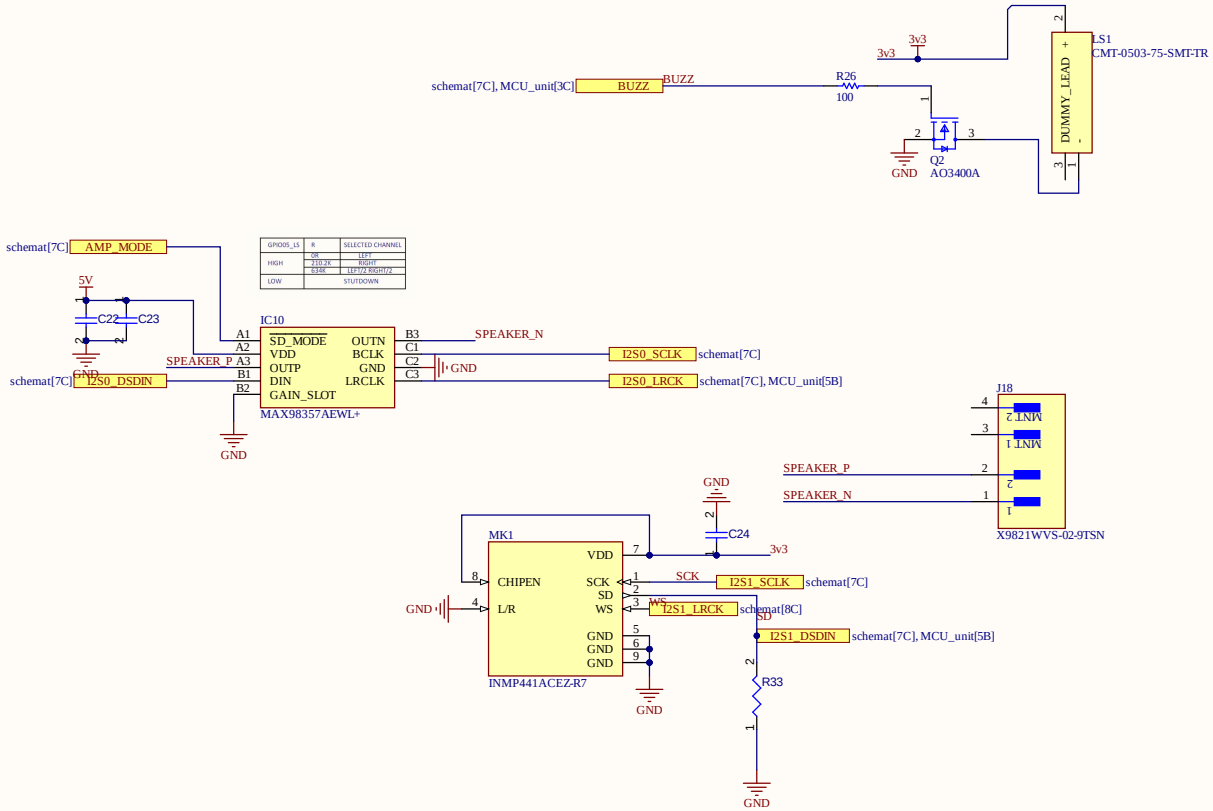

GPIO05_LS	R	SELECTED CHANNEL
HIGH	OR	LEFT
	210.2K	RIGHT
	634K	LEFT/2 RIGHT/2
LOW	STUTDOWN	

Title: audio.SchDoc		Projekt Dyplomowy	
Size: A3	Prj: Carlos - main board	Author: *	CARLOS
Date: 9/26/2026	12:31:51 AM | Sheet 5 of 25	Edited: 9/25/2026	AGH | EAIiIB
Git Hash: 9fb49a53b36a867847a73022ba8deb9954533988		Variant: [No Variations]	
File: C:\Users\Public\Documents\Altium\CARLOS - basic - Copy\audio.SchDoc		SW Version: 26.9.1.10	

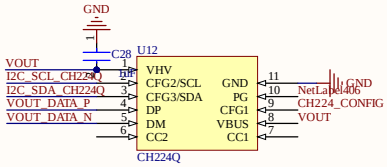

Title: *CH224Q.SchDoc*		**Projekt Dyplomowy**	
Size: A3	**Prj:** Carlos - main board	**Author:** *	
Date: 9/26/2026 12:31:53 AM	Sheet 15 of 25	**Edited:** 9/25/2026	
Git Hash: 9fb49a53b36a867847a73022ba8deb9954533988		**Variant:** [No Variations]	
File: C:\Users\Public\Documents\Altium\CARLOS - basic - Copy\CH224Q.SchDoc		**SW Version:** 26.9.1.10	

CARLOS

AGH | EAIiIB

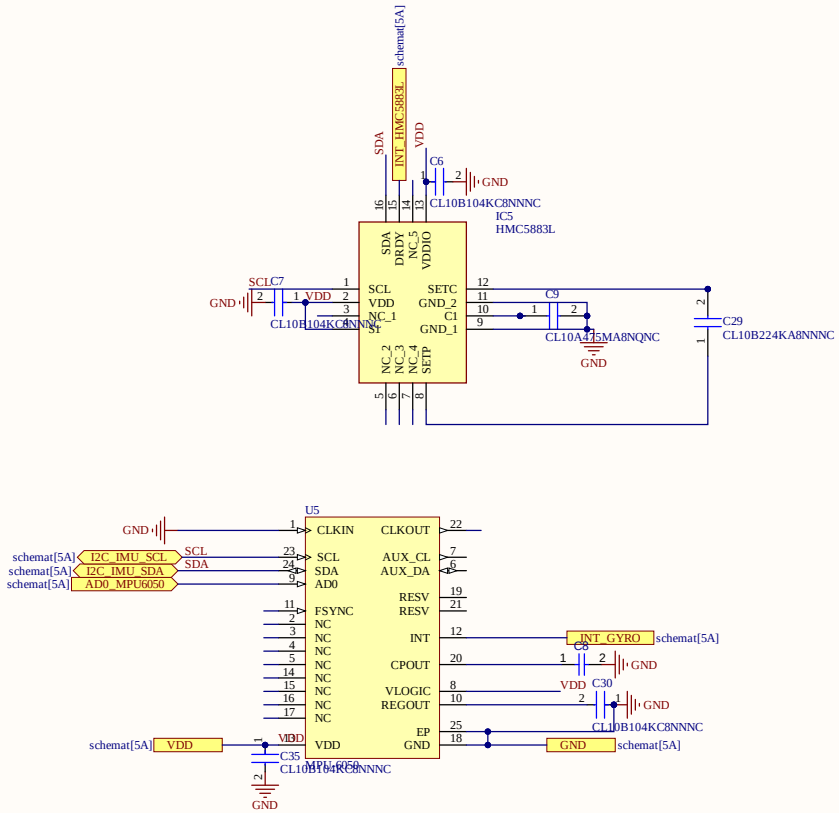

Title: *IMU.SchDoc*		Projekt Dyplomowy	
Size: A3	Prj: Carlos - main board	Author: *	CARLOS
Date: 9/26/2026 12:31:56 AM	Sheet 6 of 25	Edited: 9/25/2026	AGH | EAIiIB
Git Hash: 9fb49a53b36a867847a73022ba8deb9954533988		Variant: [No Variations]	
File: C:\Users\Public\Documents\Altium\CARLOS - basic - Copy\IMU.SchDoc		SW Version: 26.9.1.10	

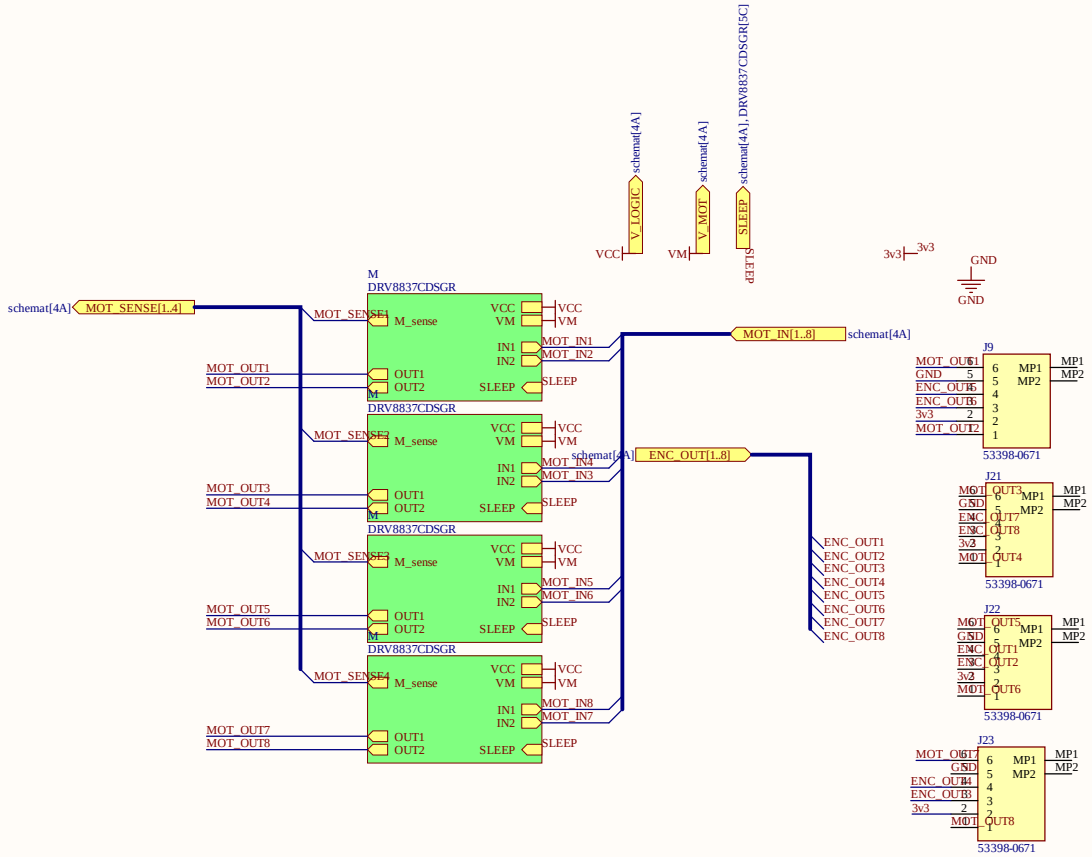

Title: *Motor_SCH.SchDoc*		**Projekt Dyplomowy**	
Size: A3	**Prj:** Carlos - main board	**Author:** *	CARLOS
Date: 9/26/2026	12:31:58 AM | Sheet 7 of 25	**Edited:** 9/25/2026	AGH | EAIiIB
Git Hash: 9fb49a53b36a867847a73022ba8deb9954533988		**Variant:** [No Variations]	
File: C:\Users\Public\Documents\Altium\CARLOS - basic - Copy\Motor_SCH.SchDoc		**SW Version:** 26.9.1.10	

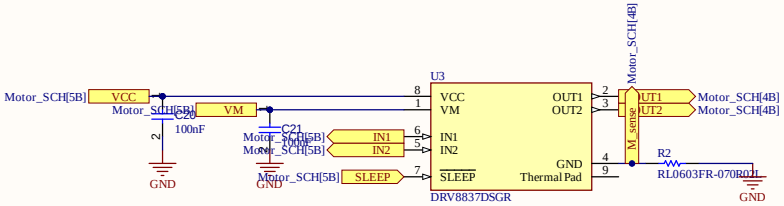

Title: *DRV8837CDSGR.SchDoc*		Projekt Dyplomowy	CARLOS
Size: A3	Prj: Carlos - main board	Author: *	AGH | EAIiIB
Date: 9/26/2026 12:32:00 AM	Sheet 8 of 25	Edited: 9/25/2026	
Git Hash: 9fb49a53b36a867847a73022ba8deb9954533988		Variant: [No Variations]	
		SW Version: 26.9.1.10	
File: C:\Users\Public\Documents\Altium\CARLOS - basic - Copy\DRV8837CDSGR.SchDoc			

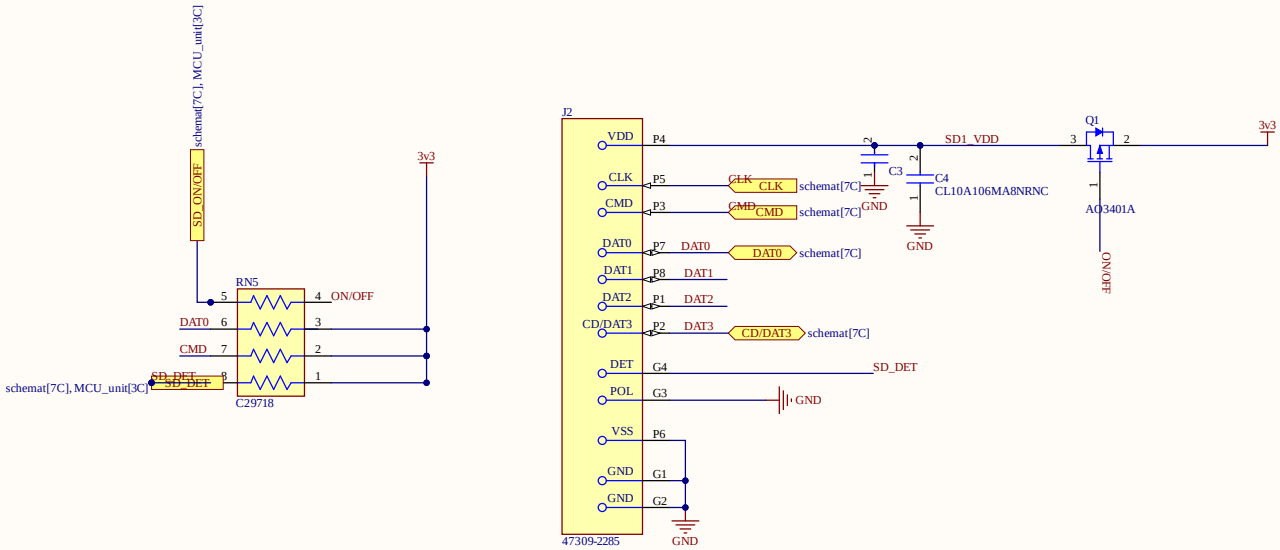

Title: *microsd_card.SchDoc*		Projekt Dyplomowy	CARLOS
Size: A3	Prj: Carlos - main board	Author: *	AGH | EAIiIB
Date: 9/26/2026 12:32:02 AM	Sheet 9 of 25	Edited: 9/25/2026	
Git Hash: 9fb49a53b36a867847a73022ba8deb9954533988		Variant: [No Variations]	
File: C:\Users\Public\Documents\Altium\CARLOS - basic - Copy\microsd_card.SchDoc		SW Version: 26.9.1.10	

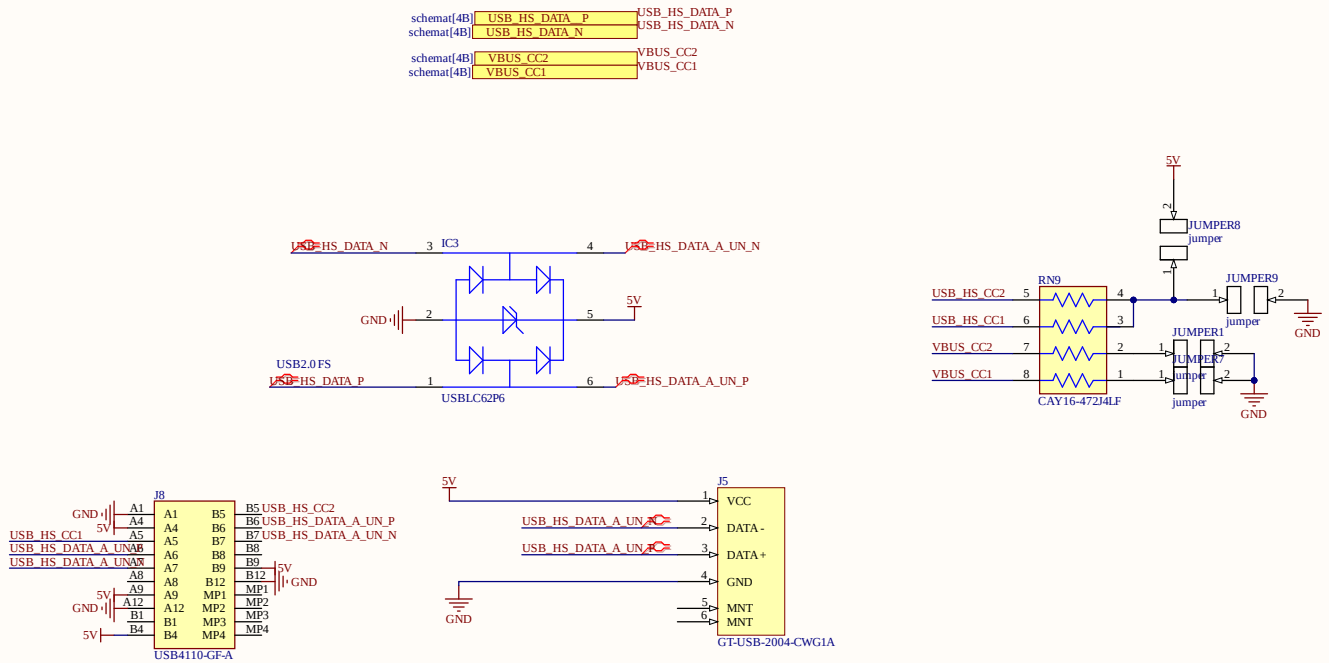

Title: USB_HS.SchDoc		Projekt Dyplomowy	CARLOS
Size: A3	Prj: Carlos - main board	Author: *	AGH | EAIiIB
Date: 9/26/2026 12:32:05 AM	Sheet 10 of 25	Edited: 9/25/2026	
Git Hash: 9fb49a53b36a867847a73022ba8deb9954533988		Variant: [No Variations]	
File: C:\Users\Public\Documents\Altium\CARLOS - basic - Copy\USB_HS.SchDoc		SW Version: 26.9.1.10	

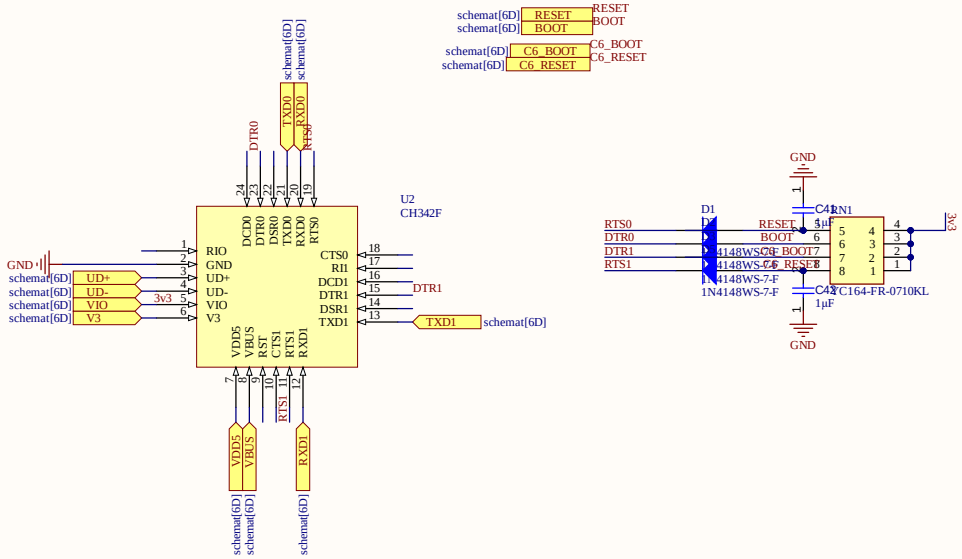

Title: CH342F.SchDoc		Projekt Dyplomowy	
Size: A3	Prj: Carlos - main board	Author: *	CARLOS
Date: 9/26/2026 12:32:08 AM	Sheet 11 of 25	Edited: 9/25/2026	AGH | EAIiIB
Git Hash: 9fb49a53b36a867847a73022ba8deb9954533988		Variant: [No Variations]	
File: C:\Users\Public\Documents\Altium\CARLOS - basic - Copy\CH342F.SchDoc		SW Version: 26.9.1.10	

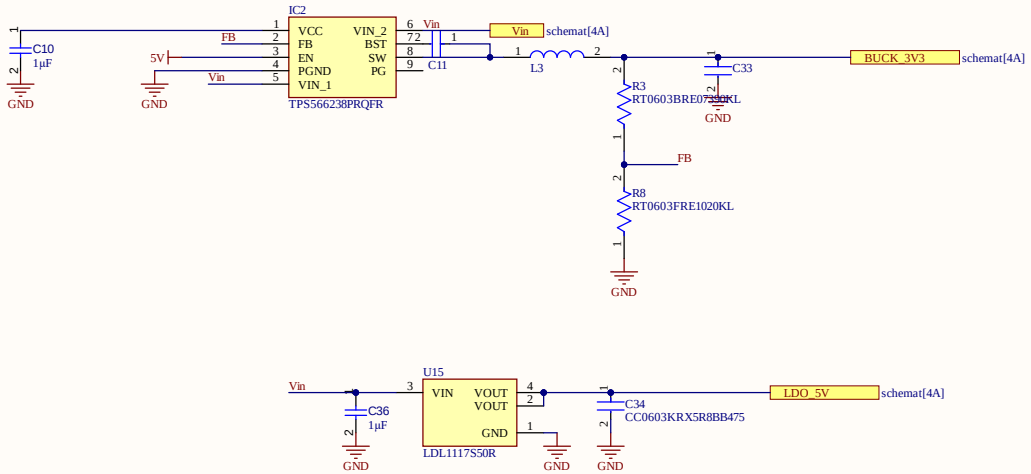

Title: *Power_block.SchDoc*		Projekt Dyplomowy	
Size: A3	Prj: Carlos - main board	Author: *	CARLOS
Date: 9/26/2026 12:32:10 AM	Sheet 12 of 25	Edited: 9/25/2026	AGH | EAIiIB
Git Hash: 9fb49a53b36a867847a73022ba8deb9954533988		Variant: [No Variations]	
File: C:\Users\Public\Documents\Altium\CARLOS - basic - Copy\Power_block.SchDoc		SW Version: 26.9.1.10	